THREADED STEPPED THERMOWELLS

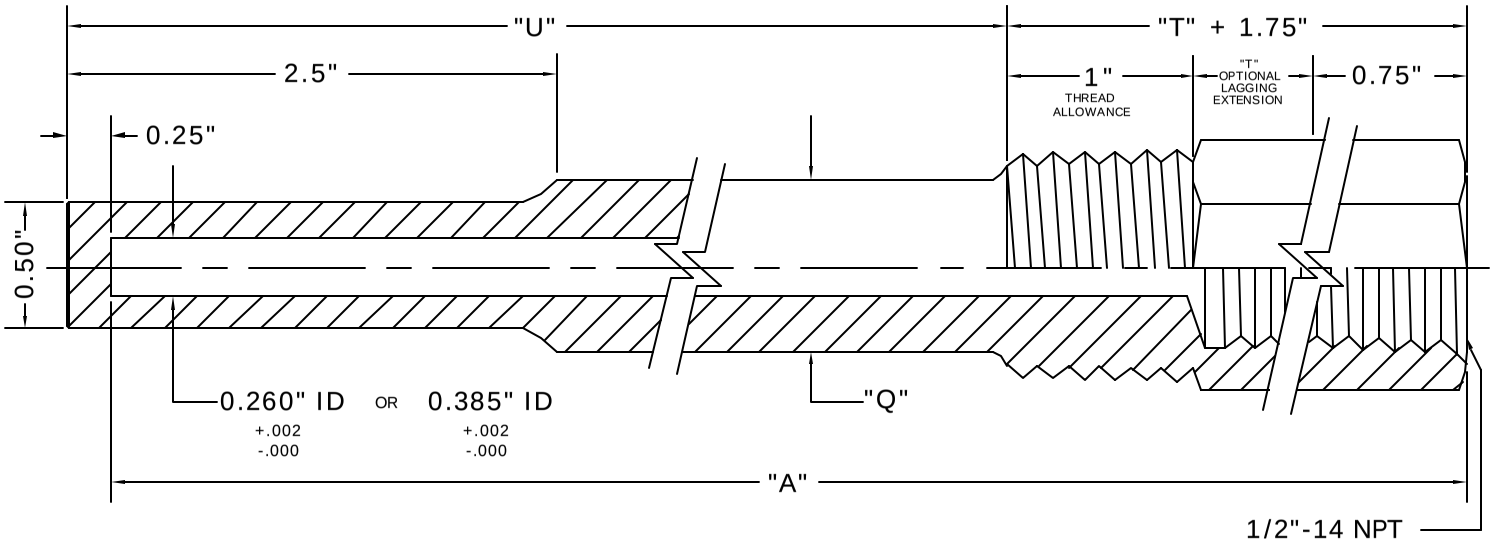

Acrolab Ltd. PH: 1-800-265-9542 FX: 1-800-465-9674 www.acrolab.com